General®

RMK GROUP OF COMPANIES

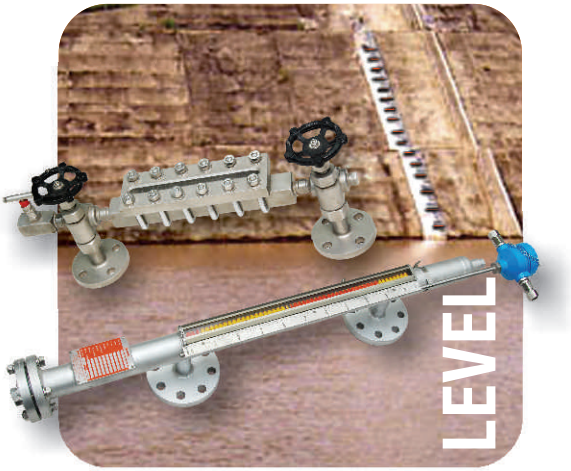

Thermal INSTRUMENT INDIA PRIVATE LIMITED

MINCO (INDIA) FLOW ELEMENTS PRIVATE LIMITED

An ISO 9001 : 2008 / ISO 14001:2004 &
OHSAS 18001:2007 Certified Company

COMPREHENSIVE
PRODUCT CATALOGUE

General

ATEX

ISO 9001:2008

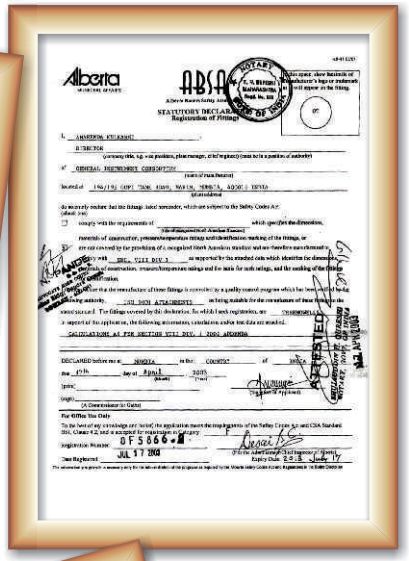

CRN

FLUOR

GOST R

CSA

ISO-14001 HS

UL

LEVEL

www.generalinstruments.net

Liquid Level Gauge

Liquid Level Gauge provides direct observation of liquid level in a tank / vessel. Rising and falling level of the liquid inside the tank / vessel can be observed through the glass assembled in the gauge.

General Instruments Consortium offers liquid level gauges to suit the process requirements. If you notify process conditions i.e. Service, Pressure and Temperature etc., General can provide optimum solution to accomplish your process requirements and economy.

- **Reflex Level Gauges**
- **Transparent Level Gauges**

Reflex Level Gauge:

In this type of level gauge the liquid level is discriminated in the form of different brightness of the light on the reflex glasses. This is based on refractive indices of liquid and gas or vapor phase. In the liquid phase light is refracted to the glass and absorbed inside the gauge whereas in vapor phase light is reflected against the glass grooves and it appears very bright. This type of gauge is mainly recommended for colourless liquid. The gauge consists of a body machined to have an internal chamber and one or more front windows only on one side of the gauge as shown in figure. On each window a special high resistance plate reflex level glass is fitted with sealing joint and metal covers seized by 'U' Bolts and Nuts.

Transparent Level Gauge:

In this type of level gauge the liquid level is discriminated in the form of different transparency of the two media. This type of level gauge is mainly recommended for coloured liquids, steam-water and interface liquid level. The gauge consists of a body having machined to have a liquid chamber and one or more windows on both the sides of the gauge as shown in figure. On each window a transparent level glass is tightly pressed with sealing joints between the metallic covers and the body by means of Bolts and Nuts.

Reflex Level Gauge

Transparent Level Gauge

Liquid Level Gauge

Specifications

Type	:	Reflex / Transparent
Visibility	:	Full Visibility / Partial Visibility
Liquid Chamber	:	Carbon Steel, SS 304, SS 304L, SS 316, SS 316L, Monel, Titanium, Inconel 600, Hastelloy C, PP, others on request
Cover Plate	:	Carbon Steel, SS 304, SS 304L, SS 316, SS 316L, Monel, Titanium, Inconel 600, Hastelloy C, PP, others on request
Cushion	:	CAF, PTFE, others on request
Gasket	:	CAF, PTFE, Graphoil, others on request
Toughened Borosilicate Glass	:	Indigenous – Temperature Range upto 125°C Klinger / Illmadur make or equivalent – Temperature Range upto 320°C as per DIN 7080/7081, BS 3463, Ö-Norm M7353/7354, JIS B 8211, MIL-G-16356D
Fasteners	:	SS, ASTM A 193 Gr. B7 / A 194 Gr. 2H
Isolation Valves	:	Screwed OR Bolted Bonnet Offset Isolation Valves with Auto Ball Check Arrangement
Process Connection	:	From 15 to 50 mm Flanged / Upto 25 mm Screwed / Socket Welded others on request.
Connection Orientation	:	Top-Bottom Vertical / Side-Side Right / Side-Side Left / Side-Side Back (Applicable only for Reflex Level Gauge)
Vent / Drain	:	½" Plugged / ½" Needle Valve / ½" Ball Valve, others on request
Scale	:	Aluminium / SS engraved in mm.
Optional	:	Mica Shields, Non – Frost Extension, Heating Jacket, Illuminators with Die Cast Aluminium Weatherproof to IP - 65 Illuminators with Die Cast Aluminium Weatherproof to IP - 67 Illuminators with Die Cast Aluminium Explosion proof Group IIA, IIB Illuminators with Die Cast Aluminium Explosion proof Group IIC
Centre to Centre Distance	:	175 mm to 3000 mm, others on request
Operating Pressure	:	For Reflex - 40 Kg/cm^2 / For Transparent - 30 Kg/cm^2, others on request
Operating Temperature	:	300°C, others on request

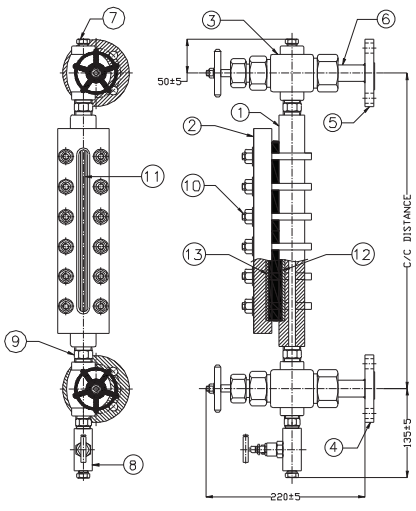

Reflex

1 Liquid Chamber
2 Cover Plate
3 Isolation Valve
4 Inlet Process Flange
5 Outlet Process Flange
6 Tail Piece
7 Vent Plug
8 Drain Valve
9 Nipple
10 Fastener
11 Reflex Glass
12 Gasket
13 Cushion
14 Transparent Glass

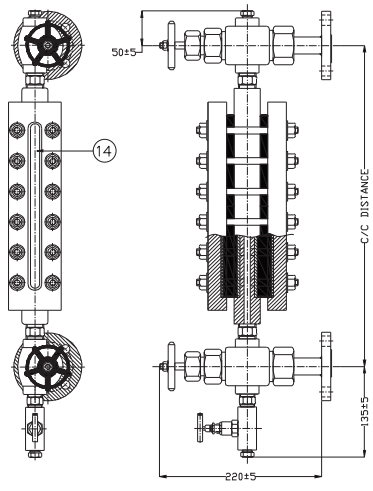

Transparent

CONSTRUCTION (SECTIONAL VIEW)

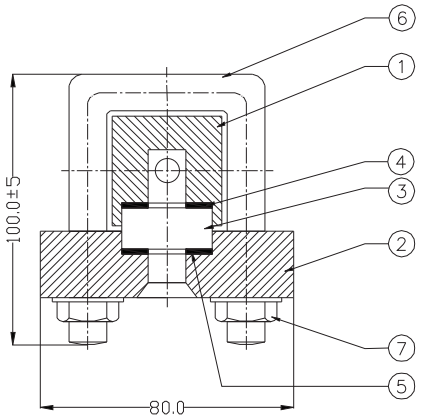

Reflex

1 LIQUID CHAMBER
2 COVER PLATE
3 REFLEX GLASS
4 GASKET
5 CUSHION
6 "U" BOLT
7 NUTS & WASHER
8 STUD BOLT
9 TRANSPARENT GLASS

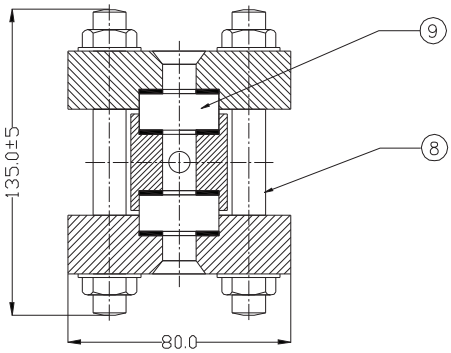

Transparent

ORIENTATION OF PROCESS CONNECTION

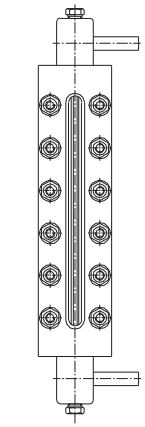

Side / Side (Left)

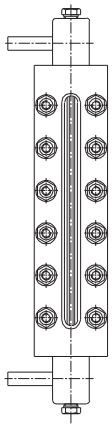

Side / Side (Right)

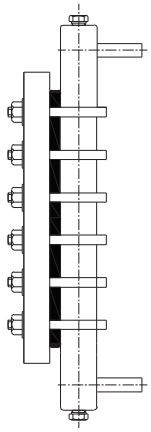

Side / Side (Back)

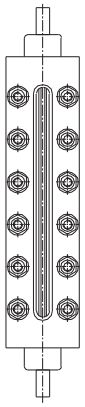

Top / Bottom

FROST FREE (SECTIONAL VIEW)

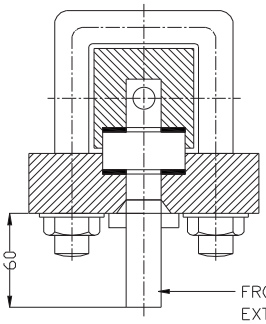

Reflex

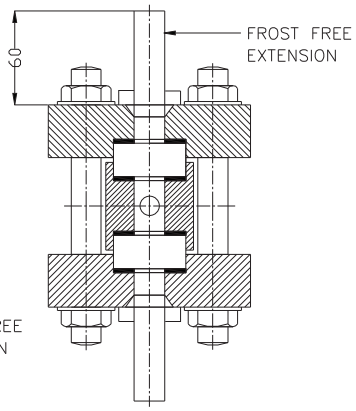

Transparent

AUTO BALL CHECK ARRANGEMENT

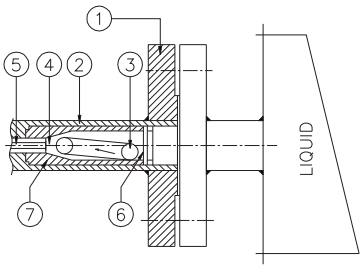

1 PROCESS FLANGE
2 NECK
3 BALL
4 ORIFICE
5 NEEDLE
6 BALL STOPPER
7 CAPSULE

Reflex Level Gauges- TDSRLG2010

GAUGE CONNECTION

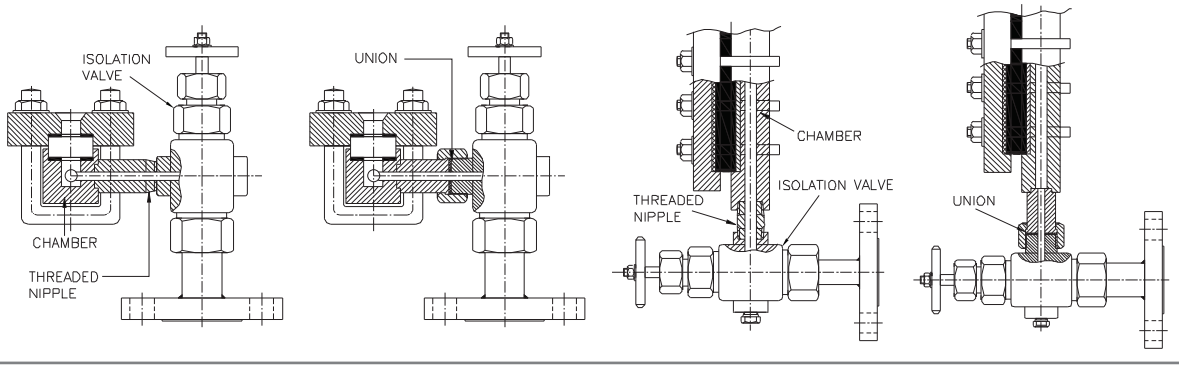

JACKETING

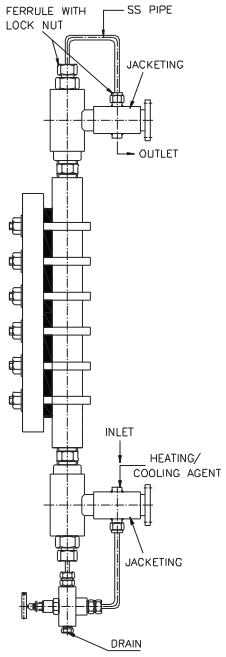

ZIG-ZAG CONSTRUCTION

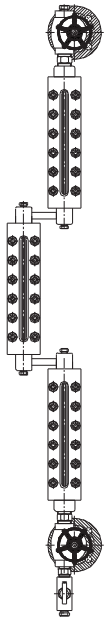

(C/C Dist. > 3.5 Mtr.)

CENTRE SUPPORT

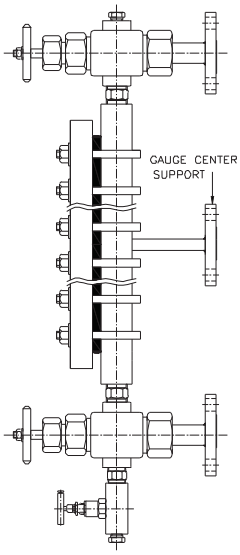

(C/C Dist. > 2.0 Mtr.)

ILLUMINATOR

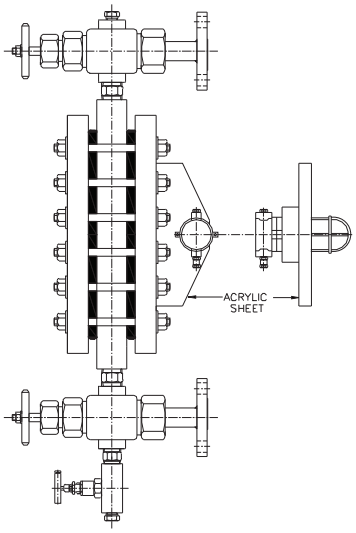

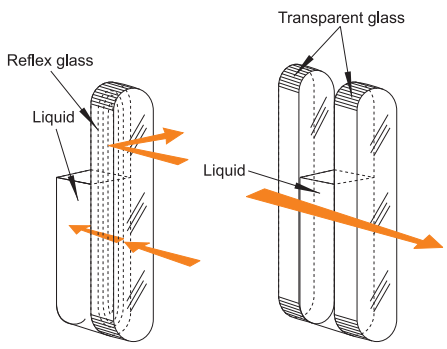

ISOLATION VALVE

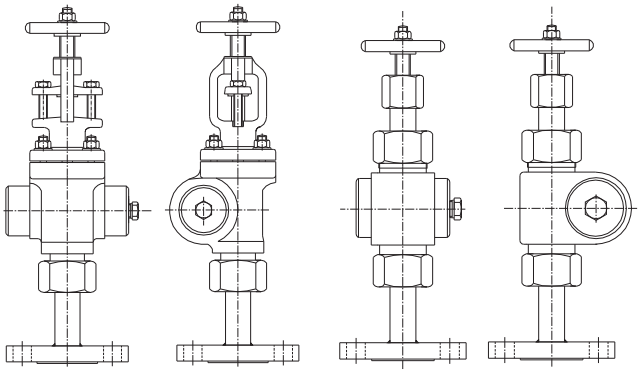

Bolted Bonnet

Screwed Bonnet

Ordering Information

RLG-TBV-1000-25F150-CCC-LCC-SPP-AL-NA-Z

															Z

Type of Level Gauge

RLG	Reflex Level Gauge
TLG	Transparent Level Gauge

Orientation of Process Connection

TBV	Top - Bottom Vertical (Partial Visibility)
SSR	Side - Side Right (Full Visibility)
SSL	Side - Side Left (Full Visibility)
SSB	Side - Side Back (Full Visibility) Applicable only for RLG

Centre to Centre Distance

1000	Indicate the required Centre to Centre Distance in mm.

Process Connection

Flanged Connection

Code	Size	Code	Code	Size
15	½”	F	150	150#RF
20	¾”		300	300#RF
25	1”		600	600#RF
40	1½		900	900#RF
50	2”		1500	1500#RF

Screwed Connection

Code	Size	Code	Threading Type
½”	½”	S	NPTM
¾”	¾”		BSPM
1”	1”		NPTF
1½”	1½”		BSPF

MOC of Liquid Chamber

C	CS	PP	Polypropylene
S4	SS 304	M	Monel
S4L	SS 304L	T	Titanium
S6	SS 316	I	Inconel 600
S6L	SS 316L	H	Hastelloy ‘C’

MOC of Cover Plate

C	CS	PP	Polypropylene
S4	SS 304	M	Monel
S4L	SS 304L	T	Titanium
S6	SS 316	I	Inconel 600
S6L	SS 316L	H	Hastelloy ‘C’

Special Features

NF	Non – Frost Extension
HJ	Heating Jacket
MS	Mica Shield (For TLG only)
IW5	Illuminator-Weatherproof IP - 65
IW7	Illuminator-Weatherproof IP - 67
IFA	Illuminator-Flameproof Gr. IIA/IIB
IFC	Illuminator-Flameproof Gr. IIC
IC	IBR Certification
NA	Not Applicable

Calibrated Scale

AL	Aluminium
SS	SS

Drain

P	½” Plugged
N	½” Needle Valve
B	½” Ball Valve

Vent

P	½” Plugged
N	½” Needle Valve
B	½” Ball Valve

Isolation Valves

S	Screwed Bonnet Offset Construction
B	Bolted Bonnet Offset Construction
N	Without Isolation Valves

Gasket

C	C.A.F.
P	P.T.F.E.
G	Graphoil

Cushion

C	C.A.F.
P	P.T.F.E.
G	Graphoil

Toughened Borosilicate Glass

L	Indigenous
F	Klinger / Illmadur make or equivalent

Fasteners

C	ASTM A 193 Gr. B7 / ASTM A 194 Gr. 2H
S	SS

U Bolt & Nut

Stud Bolt & Nut

Needle Valve

Ball Valve

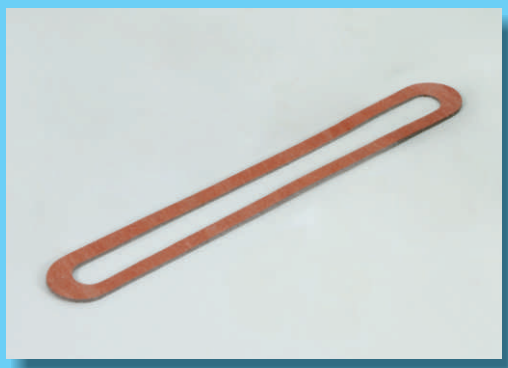

Gasket / Cushion

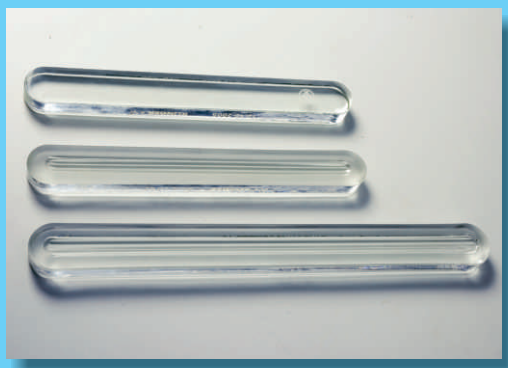

Reflex & Transparent Glass

Tubular Level Gauge

Tubular Level Gauge is the simplest form of level indication.

General Instruments Consortium offers economical and reliable level gauges for direct reading of level in tanks / vessels. Tubular Level Gauges are used to visualize the level in low or medium pressure application. Tubular Level Gauges are mounted on the side of the tank / vessel. It consists of Glass Tube, Packing Material, End Blocks and Isolation Valves, vent plug, drain valve etc.

Specifications

Type	:	Tubular
Glass Tube	:	Heavy walled borosilicate glass tube
Packing Material	:	P.T.F.E.
End Blocks	:	CS, SS 304, SS 316, PP, Other on Request
Glass Protection	:	'C' Channel in Powder Coated MS or SS / Tie Rods MS or SS
Process Connection	:	Flanged / Screwed / Triclover
Isolation Valves	:	Screwed Bonnet Offset Isolation Valves with Auto Ball Check Arrangement
Process Connection	:	From 15 to 50 mm Flanged / Upto 25 mm Screwed
Connection Orientation	:	Vertical / Right / Left / Back
Vent / Drain	:	½" Plugged / ½" Needle Valve / ½" Ball Valve
Scale	:	Aluminium / Acrylic / SS engraved in mm.
Centre to Centre Dist.	:	175 mm to 3000 mm
Max. Hydro Test Pressure	:	10 Kg/cm2
Max. Temperature	:	100°C

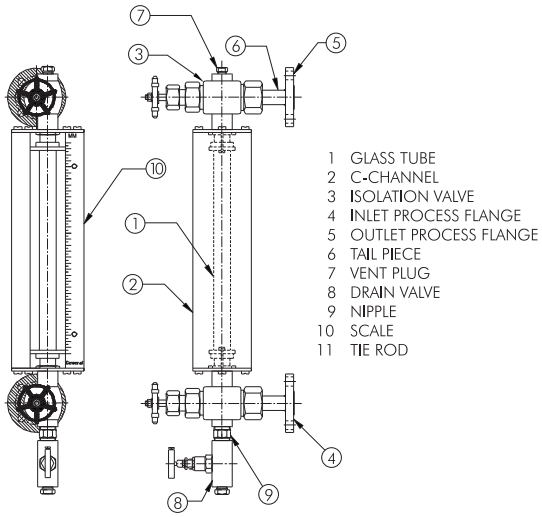

With 'C' Channel

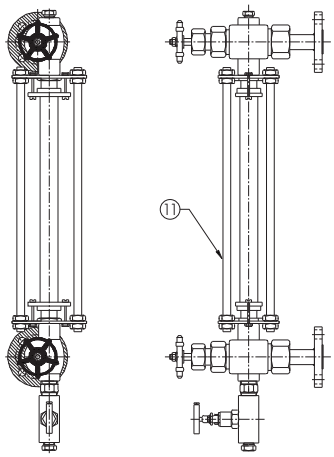

With Tie Rods

Ordering Information

TULG-1000-25F150-S4-16MST-SPP-AL-NA-Z

TULG - [ ] - [ ] - [ ] - [ ] - [ ] - [ ] - [ ] - [ ] - [ ] - [ ] - Z

Centre to Centre Distance	
1000	Indicate the required Centre to Centre Distance in mm.

Process Connection				
Flanged Connection				
Code	Size	Code	Code	Size
15	½"	F	150	150#RF
20	¾"			
25	1"			
40	1½			
50	2"			
Screwed Connection				
Code	Size	Code	Threading Type	
½"	½"	S	NPTM	
¾"	¾"		BSPM	
1"	1"		NPTF	
1½"	1½"		BSPF	

MOC of Wetted Parts	
C	CS
S4	SS 304
S4L	SS 304L
S6	SS 316
S6L	SS 316L
P	PP
X	Special MOC

Glass Tube	
16	16 mm O.D.
19	19 mm O.D.

Glass Protection	
MST	M.S. Tie Rods
SST	SS Tie Rods
MSC	MS Powder Coated 'C' Channels
SSC	SS 'C' Channels

Special Features	
PCS	P.T.F.E. Lined CS, Flange Orientation Top - Bottom*
PS4	P.T.F.E. Lined SS 304, Flange Orientation Top - Bottom*
PS4L	P.T.F.E. Lined SS 304L, Flange Orientation Top - Bottom*
PS6	P.T.F.E. Lined SS 316, Flange Orientation Top - Bottom*
PS6L	P.T.F.E. Lined SS 316L, Flange Orientation Top - Bottom*

* Without Isolation Valves & Drain / Vent

Calibrated Scale engraved in mm	
AL	Aluminium
SS	SS
AC	Acrylic

Drain	
P	½" Plugged
N	½" Needle Valve
B	½" Ball Valve

Vent	
P	½" Plugged
N	½" Needle Valve
B	½" Ball Valve

Isolation Valves	
S	Screwed Bonnet Offset Construction
N	Without Isolation Valves

Magnetic Level Gauge

Magnetic Level Gauges provides clear, high clarity indication of liquid level. Magnetic Level Gauges are principally designed as an alternative to glass level gauges. MLGs are now widely used in all industries as they avoid direct contact with indicator system; it eliminates need of glass for direct level indication and prevents chemical spillage due to breakage of glass.

General Instruments Consortium offers Magnetic Level Gauges in top-bottom, top and side mounted construction with two types of indicator systems i.e. Capsule Shuttle and Bicolour Rollers. Magnetic Level Gauge is consists of three major components: Float Chamber, Float and Indicator System.

Magnetic Level Gauges operates on the principle of magnetic field coupling to provide fluid level information. Float chamber is typically constructed with non magnetic pipe having process connections that matches to the vessel connections. Float size and weight is determined by the process fluid, pressure, temperature and the specific gravity of the process fluid. Float contains magnets to provide 3600 magnetic flux field.

Magnetic Level Gauge

- Flapper

Indicator system is consists of bicolour rollers equipped with magnets mounted on rail inside the housing. As the level starts rising or falling magnetic float also travels with liquid level in non magnetic chamber. The magnetic interaction between magnets in float and bicolour rollers causes each roller to rotate 1800.

Magnetic Level Gauge

- Capsule Shuttle

Indicator system consists of capsule shuttle housed in the glass tube inside the housing. As the level starts rising or falling magnetic float also travels with liquid level in non magnetic chamber. The magnetic interaction between magnets in float and capsule shuttle causes capsule to travel along with magnetic float.

Flapper

Capsule Shuttle

Magnetic Level Gauge

General

Specifications

Type	: Magnetic Level Gauge
Mounting Orientation	: Top Mounted, Side Mounted & Top – Bottom
Indicator System	: Bicolour Rotating Flappers / Capsule Shuttle
Housing for Indicator System	: Bicolour Flappers – RAIL in Aluminium or SS Housing Capsule Shuttle – Heavy Walled Glass Tube in Aluminium / SS Housing
MOC of Indicators	: Bicolour Flappers – Aluminium Capsule Shuttle – Plastic
Float Chamber	: Non Magnetic Standpipe
MOC of Float Chamber	: SS 304, SS 304L, SS 316, SS 316L, Monel, Titanium, Inconel 600, Hastelloy C, PP, PVDF, Other on request
Float	: SS 304, SS 304L, SS 316, SS 316L, Monel, Titanium, Inconel 600, Hastelloy C, PP, PVDF, Others on request
Process Connection	: Flanged in various sizes
Vent	: ½" Plugged / ½" Needle Valve / ½" Ball Valve
Drain	: ½" Plugged / ½" Needle Valve / ½" Ball Valve
Scale	: Aluminium / SS engraved in mm
Optional	: Still Well for Top Mounted Construction
Limit Switch Assembly	: Snap Acting 1 SPDT Microswitch, 5A, 230 VAC
Switch Housing	: • Die Cast Aluminium Weatherproof to IP – 65 • Die Cast Aluminium Explosion proof suitable for Group IIA, IIB • Die Cast Aluminium Explosion proof suitable for Group IIC
Electrical Cable Entry	: ¾"ET(F)
Centre to Centre Distance	: Bicolour Flappers – upto 5000 mm Capsule Shuttle – upto 3000 mm
Max. Operating Pressure	: 25 Kg/cm2 (others on request)
Max. Operating Temperature	: For Side Mounted 10 to 80°C / For Top Mounted 10 to 120°C (others on request)

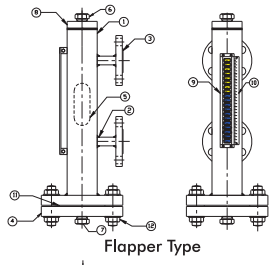

Flapper Type

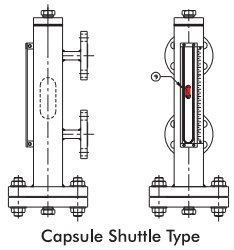

Capsule Shuttle Type

1 Liquid Chamber
2 Nozzle
3 Process Flange
4 Bottom Flange
5 Magnetic Float
6 Vent Plug
7 Drain Valve
8 Top Cap
9 Indicating System
11 Scale
12 Gasket
13 Fastener

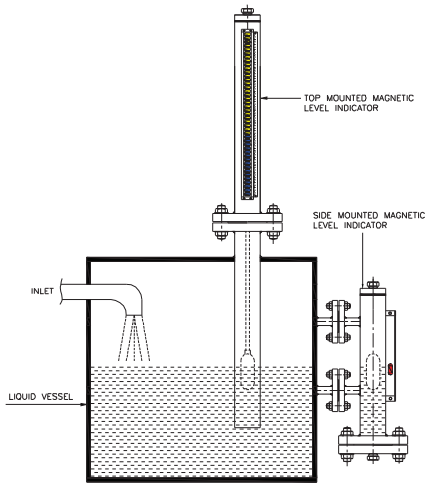

Magnetic Level Gauge

Ordering Information

MLG-SF-1000-50F150-S4S4C-CPP-AL-NA-Z

MLG - [ ] [ ] - [ ] [ ] [ ] [ ] [ ] [ ] [ ] [ ] [ ] [ ] [ ] [ ] - [ ] - Z

Mounting Orientation	
T	Top Mounted
S	Side Mounted

Type of Level Gauge	
C	Capsule Shuttle
F	Bicolor Rotating Flappers

Centre to Centre Distance	
1000	Indicate the required Centre to Centre Distance in mm

Process Connection

Code	Size	Code	Code	Rating
15	½”	F	150	150#RF
20	¾”			
25	1”		300	300#RF
40	1½”			
50	2”		600	600#RF
65	2½”			
80	3”		900	900#RF
100	4”			

MOC of Liquid Chamber	
S4	SS 304
S4L	SS 304L
S6	SS 316
S6L	SS 316L
P	PP
M	Monel
T	Titanium
I	Inconel 600
H	Hastelloy C

MOC of Float	
S4	SS 304
S4L	SS 304L
S6	SS 316
S6L	SS 316L
P	PP
M	Monel
T	Titanium
I	Inconel 600
H	Hastelloy C

Special Features	
W5	Limit Switch with Die Cast Aluminium Enclosure Weatherproof to IP – 65
EA	Limit Switch with Die Cast Aluminium Enclosure Explosion proof suitable for Group IIA, IIB
EC	Limit Switch with Die Cast Aluminium Enclosure Explosion proof suitable for Group IIC
NA	Not Applicable

Calibrated Scale engraved in mm	
AL	Aluminium
SS	SS

Drain	
P	½” Plugged
N	½” Needle Valve
B	½” Ball Valve
NA	For Top Mounting

Vent	
P	½” Plugged
N	½” Needle Valve
B	½” Ball Valve

Gasket	
C	C.A.F.
P	P.T.F.E.
G	Graphoil

Fasteners	
C	CS Plated
S4	SS

Note: For Top Mounted MLG Process Connection shall be 3” and above

Direct Insert Float Operated

General Instruments Consortium offers Side Mounted Level Switches for single level set point. This is trouble free, consistent and inexpensive solution to control Level in the tanks / vessels.

GIC offers two types of Direct Mounted Level Switches:

- **Series SMLS/1000**
- **Series TMLS/1000**

Side Mounted Direct Insert Type

(Series SMLS/1000)

This is direct mounted type level switch. This type uses counterbalance principle. It consists of Float, Float Stem with counterbalance weight and switch mechanism with magnet attracter. To ensure the safety and reliability GIC offers heavy wall floats.

In this type of Level Switch Float held in horizontal position and moves upwards and downwards with rising and falling level in the tank / vessel. This movement results in a rotary motion of the attracter causes actuation of microswitch. To improve reliability it employs dual opposed magnet design which provides snap action. This type of level switch is mounted directly on the tank / vessel having horizontal nozzle as shown in figure. The tank / vessel connection must be located at the elevation where set level is to occur.

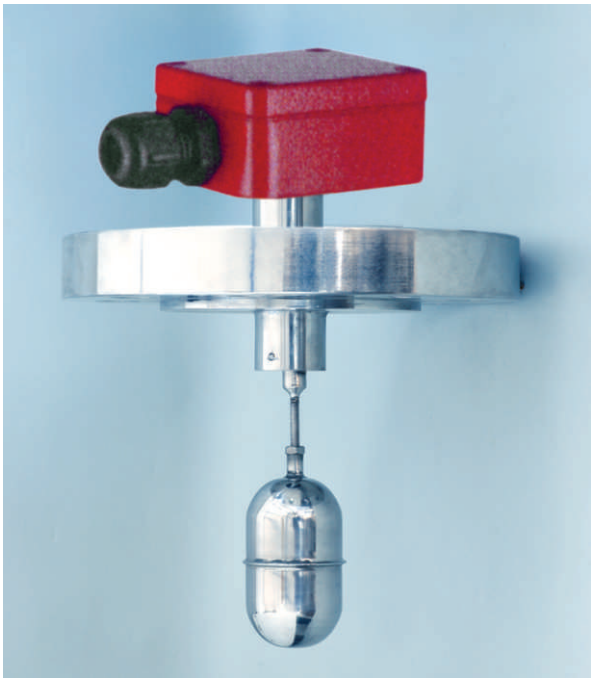

Top Mounted Direct Insert Type

(Series TMLS/1000)

This is direct mounted type level switch. This provides contact changeover at a selected elevation level in the tank / vessel. Switch is mounted on top of the tank / vessel and coupled with float assembly rides on the liquid surface with rising and falling of level. The magnet attracter is connected on the isolating tube as shown in figure. As the level rises stem head of float assembly reaches upto attracter causes actuation of microswitch. To improve reliability the stem guide is located just above the float. This type of level switch is used for lengths upto 2000 mm.

Level Switch

Specifications

Type	:	Direct Insert Type
Mounting Orientation	:	Side Mounted / Top Mounted
Float MOC	:	SS 304, SS 304L, SS 316, SS 316L, Monel, Titanium, Inconel 600, Hastelloy C, others on request
Float Stem MOC	:	SS 304, SS 304L, SS 316, SS 316L, Monel, Titanium, Inconel 600, Hastelloy C, others on request
Flange MOC	:	SS 304, SS 304L, SS 316, SS 316L, Monel, Titanium, Inconel 600, Hastelloy C, others on request
Switch Type	:	Snap Acting 1 SPDT / 2 SPDT Microswitch, 5A, 230 VAC
Switch Housing	:	• Die Cast Aluminium Weatherproof to IP – 65 • Die Cast Aluminium Explosion proof suitable for Group IIA, IIB • Die Cast Aluminium Explosion proof suitable for Group IIC
Electrical Connection	:	¾"ET(F)
Length below flange	:	Upto 2000 mm (applicable for Top Mounted)
Process Connection	:	Flanged in various sizes
Minimum Specific Gravity	:	0.8, others on request
Maximum Pressure	:	Up to 20 Kg/cm² at ambient temperature, others on request
Maximum Temperature	:	Upto 150°C, others on request

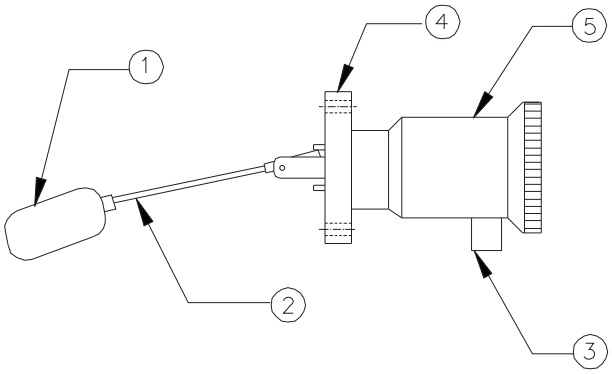

1 Float
2 Float Stem
3 Cable Entry
4 Process Connection
5 Switch Housing

Direct Insert

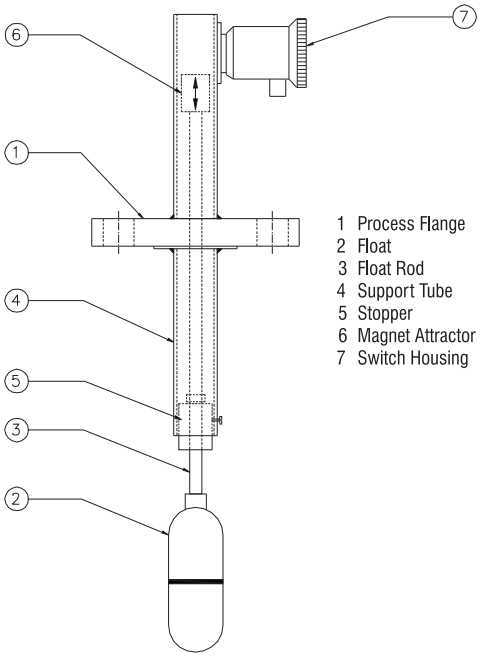

1 Process Flange
2 Float
3 Float Rod
4 Support Tube
5 Stopper
6 Magnet Attractor
7 Switch Housing

Top Mounted

Ordering Information

SMLS/1000-50F150-S4-1S-W5-Z

Series	
SMLS/1000	Side Mounted
TMLS/1000	Top Mounted

Process Connection				
Code	Size	Code	Code	Rating
50	2”	**F**	**150**	150#RF
65	2½”			
80	3”		**300**	300#RF
100	4”			

MOC of Float Assembly	
S4	SS 304
S4L	SS 304L
S6	SS 316
S6L	SS 316L
M	Monel
T	Titanium
I	Inconel 600
H	Hastelloy C

Enclosure	
W5	Die Cast Aluminium Weatherproof to IP – 65
EA	Die Cast Aluminium Explosion proof suitable for Group IIA, IIB
EC	Die Cast Aluminium Explosion proof suitable for Group IIC

MicroSwitch	
1S	1 SPDT
2S	2 SPDT

Level Switch

External Cage Chamber

General Instruments Consortium offers External Cage Type Level Switches for single level set point. This is trouble free, consistent and inexpensive solution to control Level in the tanks / vessels.

GIC offers following Series of External Cage Chamber Type Level Switches:

- Series SMLS/2000
- Series TMLS/2000

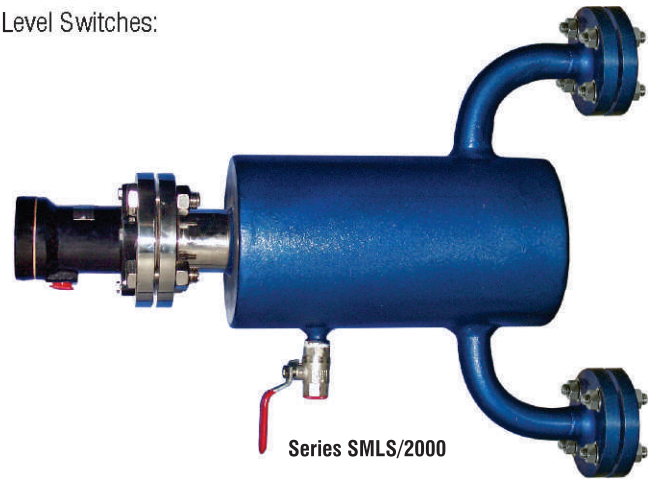

Series SMLS/2000

Series SMLS/2000

This type of level switch consists of fabricated external cage with inlet-outlet process connections having fixed distance. The switch assembly is mounted horizontally on the external cage as shown in figure. The external cage type level switch is mounted outside the tank / vessel which significantly reduce effect of turbulence. It also provides ease of online maintenance without impeding the process conditions.

Series TMLS/2000

This type of level switch assembly is mounted vertically on the external cage as shown in figure. The external cage type level switch is mounted outside the tank / vessel which significantly reduces effect of turbulence.

Series TMLS/2000

Specifications

Type	: External Cage Chamber
Series	: SMLS/2000, TMLS/2000
Float MOC	: SS 304, SS 304L, SS 316, SS 316L, Monel, Titanium, Inconel 600, Hastelloy C, others on request
Float Stem MOC	: SS 304, SS 304L, SS 316, SS 316L, Monel, Titanium, Inconel 600, Hastelloy C, others on request
Flange MOC	: SS 304, SS 304L, SS 316, SS 316L, Monel, Titanium, Inconel 600, Hastelloy C, others on request
Switch Type	: Snap Acting 1 SPDT / 2 SPDT Microswitch, 5A, 230 VAC
Switch Housing	: • Die Cast Aluminium Weatherproof to IP – 65 • Die Cast Aluminium Explosion proof suitable for Group IIA, IIB • Die Cast Aluminium Explosion proof suitable for Group IIC
Electrical Connection	: ¾"ET(F)
External Cage Chamber	: CS, SS 304, SS 304L, SS 316, SS 316L, Monel, Titanium, Inconel, Hastelloy C etc.
Centre to Centre Distance	: 250 mm (Standard)
Process Connection	: Flanged in various sizes
Minimum Specific Gravity	: 0.8, others on request
Maximum Pressure	: Up to 20 Kg/cm^2 at ambient temperature, others on request
Maximum Temperature	: Upto 150^{0}C, others on request

Ordering Information

TMLS/2000-50F150-S4S4-PP-1S-W5-Z

Series	
SMLS/2000	Side Mounted
TMLS/2000	Top Mounted

Process Connection				
Code	Size	Code	Code	Rating
15	½"	F	150	150#RF
20	¾"			
25	1"			
40	1½"		300	300#RF
50	2"			

MOC of Float Assembly	
S4	SS 304
S4L	SS 304L
S6	SS 316
S6L	SS 316L
M	Monel
T	Titanium
I	Inconel 600
H	Hastelloy C

MOC of External Chamber	
C	CS
S4	SS 304
S4L	SS 304L
S6	SS 316
S6L	SS 316L
M	Monel
T	Titanium
I	Inconel 600
H	Hastelloy C

Enclosure	
W5	Die Cast Aluminium Weatherproof to IP – 65
EA	Die Cast Aluminium Explosion proof suitable for Group IIA, IIB
EC	Die Cast Aluminium Explosion proof suitable for Group IIC

MicroSwitch	
1S	1 SPDT
2S	2 SPDT

Drain	
P	½" Plugged
N	½" Needle Valve
B	½" Ball Valve

Vent	
P	½" Plugged
N	½" Needle Valve
B	½" Ball Valve

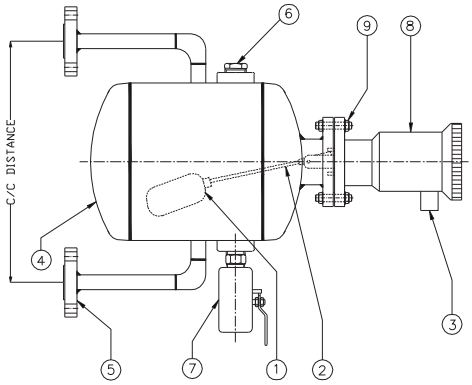

1 Float
2 Float Stem
3 Cable Entry
4 Liquid Chamber
5 Process Connection
6 Vent Plug
7 Drain Valve
8 Switch Housing
9 Fastener

Side Mounted

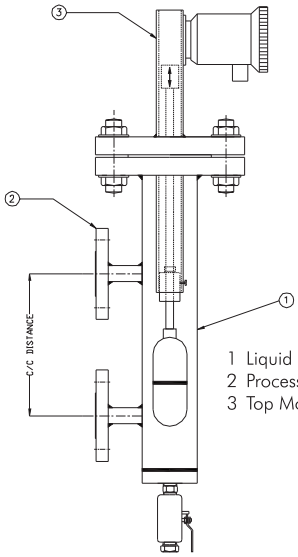

1 Liquid Chamber
2 Process Flange
3 Top Mounted LevelSwitch

Top Mounted

Level Switch

Top Mounted Float Operated

General Instruments Consortium offers Top Mounted Float Operated Level Switches for single and multiple level set points.

- **Series TMLS/4000**

Top Mounted Float Operated Level Switch (Series TMLS/4000)

This is top mounted type level switch provided single or multiple set points. It uses float that glides on the surface of liquids. This level switch is consists of Terminal Enclosure, Float Stem with Reed Switches and Float with magnets assembled inside. This type of level switch can be used for single or multiple level controls. When level rises float travels with the liquid on the float stem and when it comes in contact with the reed switches located at a predetermined length of the stem, due to magnetic force reed switch changes its contact. This type of level switch is used for lengths upto 3000 mm. It is recommended to use perforated stillwell for lengths more than 1500 mm.

Specifications

Type	: Top Mounted Float Operated Level Switch
Mounting Orientation	: Top
Float	: SS 304, SS 304L, SS 316, SS 316L, PP, others on request
Flange MOC	: CS, SS 304, SS 304L, SS 316, SS 316L, PP, others on request
Float Stem	: SS 304, SS 304L, SS 316, SS 316L
Switch Type	: Reed Switch, 0.5A, 230 VAC
Switch Housing	: • Die Cast Aluminium Weatherproof to IP – 65 • Die Cast Aluminium Explosion proof suitable for Group IIA, IIB • Die Cast Aluminium Explosion proof suitable for Group IIC
Electrical Connection	: ¾"ET(F)
Length below flange	: Upto 3000 mm
Process Connection	: Flanged in various sizes
Minimum Specific Gravity	: 0.8, others on request
Maximum Pressure	: Up to 10 Kg/cm^2 at ambient temperature, others on request
Maximum Temperature	: Upto 150°C, others on request

Ordering Information

TMLS/4000-50F150-S4S4S4-W5-Z

TMLS/4000						Z

Process Connection

Code	Size	Code	Code	Rating
50	2”	F	150	150#RF
65	2½”			
80	3”		300	300#RF
100	4”			

Enclosure

W5	Die Cast Aluminium Weatherproof to IP – 65
EA	Die Cast Aluminium Explosion proof suitable for Group IIA, IIB
EC	Die Cast Aluminium Explosion proof suitable for Group IIC

MOC of Flange

C	CS
S4	SS 304
S4L	SS 304L
S6	SS 316
S6L	SS 316L
PP	PP

MOC of Float Stem

S4	SS 304
S4L	SS 304L
S6	SS 316
S6L	SS 316L

MOC of Float

S4	SS 304
S4L	SS 304L
S6	SS 316
S6L	SS 316L
PP	PP

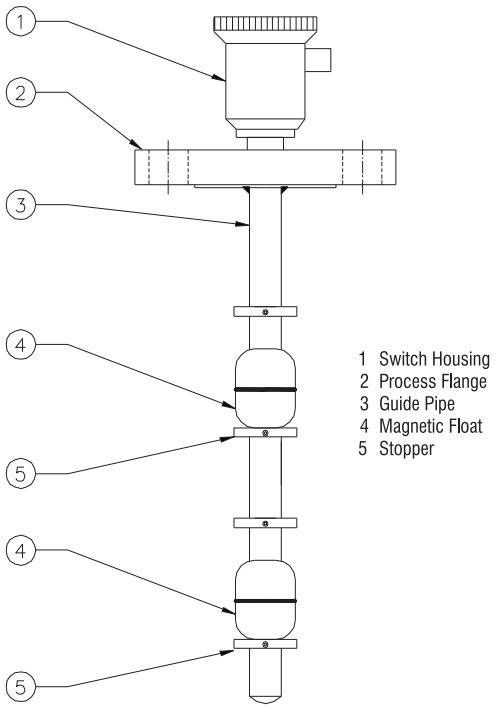

Float Operated Level Switch

Level Switch

Top Mounted Displacer Operated

General Instruments Consortium offers Top Mounted Displacer Operated Level Switches for single and multiple level set points:

- Series TMLS/3000

This is top mounted type level switch provided single or multiple set points. It uses displacer that do not float on the surface of liquids. Working principle of the level switch is based on a buoyancy principle. This level switch is consists of Switch Assembly, Wire Rope with Spring Assembly and Displacer suspended on spring. Displacer having more density than the process liquid is used. Spring selection is determined by the weight of the displacer. When level rises it displacer is submerged and amount of weight equal to the weight of process liquid is displaced. This displacement relives spring tension causes the actuation of microswitch. This type of level switch is used for lengths upto 10000 mm.

Specifications

Type	:	Top Mounted Displacer Operated Level Switch
Mounting Orientation	:	Top
Displacer	:	SS 304, SS 304L, SS 316, SS 316L, PP, Other on request
Flange MOC	:	CS, SS 304, SS 304L, SS 316, SS 316L, PP, Other on request
Spring Assembly	:	SS 304, SS 304L, SS 316, SS 316L
Wire Rope	:	SS 304, SS 304L, SS 316, SS 316L
Switch Type	:	Snap Acting 1 SPDT / 2SPDT Microswitch, 5A, 230 VAC
Switch Housing	:	• Die Cast Aluminium Weatherproof to IP – 65 • Die Cast Aluminium Explosion proof suitable for Group IIA, IIB • Die Cast Aluminium Explosion proof suitable for Group IIC
Electrical Connection	:	¾"ET(F)
Length below flange	:	Upto 10000 mm
Process Connection	:	Flanged in various sizes
Minimum Specific Gravity	:	0.8, other on request
Maximum Pressure	:	Up to 40 Kg/cm^2 at ambient temperature, other on request
Maximum Temperature	:	Upto 150°C, other on request

Ordering Information

TMLS/3000-50F150-S4S4-S4S4-1S-W5-Z

TMLS/3000								Z

Process Connection

Flanged Connection

Code	Size	Code	Code	Rating
50	2”	F	150	150#RF
65	2½”			
80	3”		300	300#RF
100	4”			

Enclosure

W5	Die Cast Aluminium Weatherproof to IP – 65
EA	Die Cast Aluminium Explosion proof suitable for Group IIA, IIB
EC	Die Cast Aluminium Explosion proof suitable for Group IIC

MOC of Flange

C	CS
S4	SS 304
S4L	SS 304L
S6	SS 316
S6L	SS 316L
PP	PP

MicroSwitch

1S	1 SPDT
2S	2 SPDT

MOC of Wire Rope

S4	SS 304
S4L	SS 304L
S6	SS 316
S6L	SS 316L

MOC of Displacer

S4	SS 304
S4L	SS 304L
S6	SS 316
S6L	SS 316L
PP	PP

MOC of Spring

S4	SS 304
S4L	SS 304L
S6	SS 316
S6L	SS 316L

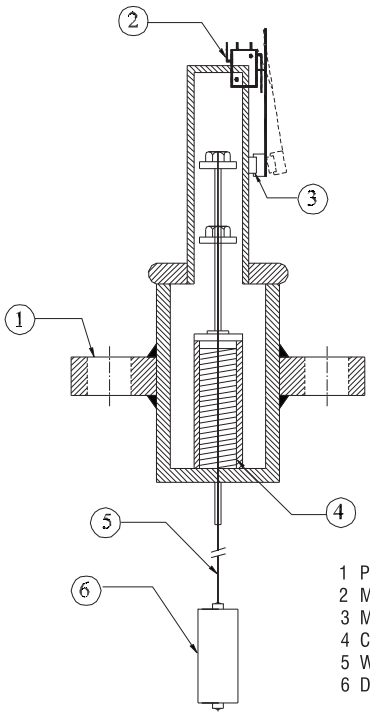

1 Process Flange
2 Micro Switch
3 Magnet Attractor
4 Compression Spring
5 Wire Rope
6 Displacer

Displacer Type Level Switch

Sight Flow Indicator

Sight flow Indicator is the simplest instrument for viewing flow of different type of fluids in the process line.

General Instruments Consortium offers sight flow indicators of following types:

- **Double Window – Plain**
- **Double Window – Rotary Wheel**
- **Double Window – Flapper**
- **Double Window – Drip Tube**
- **Double Window – Ball**
- **Full View**

Double Window – Plain
This type of sight flow indicator is recommended where flow is turbulent. This flow indicator is used to monitor vertical or horizontal flow.

Double Window – Rotary Wheel
This type of sight flow indicator is best suited for the lines carrying dark solutions where rotary movement can be easily detected.

Double Window – Flapper

This type of sight flow indicator is recommended for vertical upward as well as horizontal flow. This flow indicator is suitable for colourless and transparent fluids.

Double Window – Drip Tube

This type of sight flow indicator is particularly recommended for vertically downwards flow lines having intermittent flow e.g. flow lines in distillation columns.

Double Window – Ball

This type of sight flow indicator is suitable for colourless gas flow. Usually recommended for vertically upwards and horizontal flow.

Full View

This type of sight flow indicator is used for viewing the process flow to assure that the flow is continuous or to note the process turbidity, colour etc.

Sight Flow Indicator

Specifications

Type	: Double Window - Plain / Rotary Wheel / Flapper / Drip Tube / Ball, Full View
Body	: CS, SS 304, SS 304L, SS 316, SS 316L, others on request
Retainer Flange	: CS, SS 304, SS 304L, SS 316, SS 316L, others on request
Cushion / Gasket	: C.A.F. / P.T.F.E. / Graphoil
Glass	: Toughened Borosilicate
Process Connection	: Flanged / Screwed
Fasteners	: SS , ASTM A193 Gr. B7 / A 194 Gr. 2H

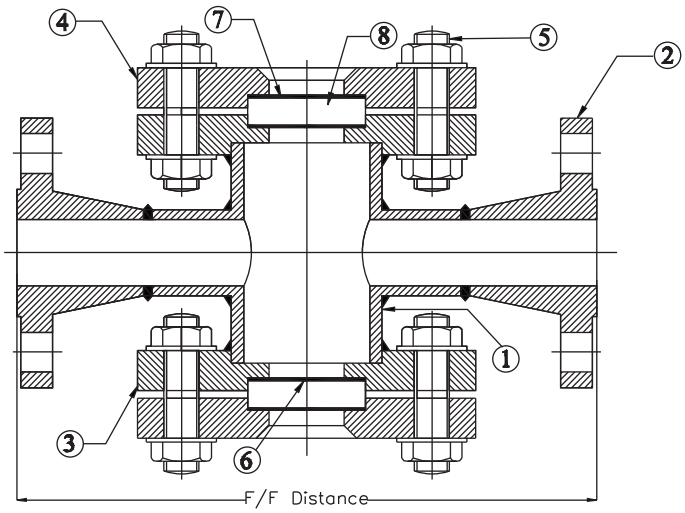

1 Body
2 Process Flange
3 Glass Holder
4 Cover Plate
5 Fastener
6 Gasket
7 Cushion
8 Glass
9 Flapper
10 Drip Tube
11 Rotary Wheel

Double Window – Plain

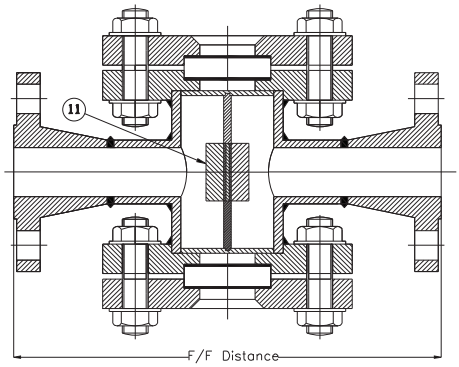

Double Window – Rotary Wheel

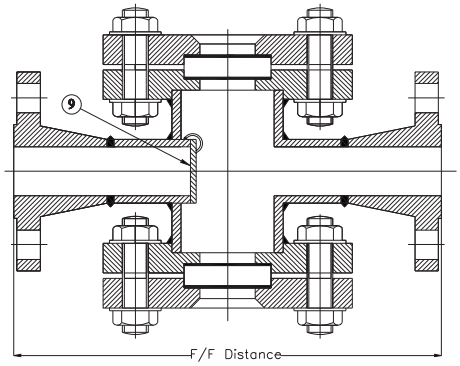

Double Window – Flapper

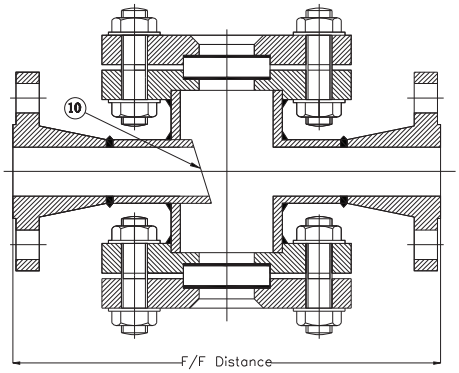

Double Window – Drip Tube

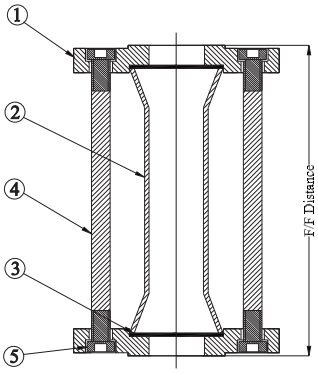

1 Process Flange
2 Glass
3 Gasket
4 Supporting Rod
5 Fastener

Full View

Sight Flow Indicator

Ordering Information

SFI-DWP-80F150-CS4C-CC-Z

SFI - [ ] - [ ] - [ ] - [ ] - [ ] - [ ] - [ ] - Z

Type of Sight Flow Indicator	
DWP	Double Window - Plain
DWR	Double Window - Rotary Wheel
DWF	Double Window - Flapper
DWD	Double Window - Drip Tube
DWB	Double Window – Ball
FW	Full View

Process Connection				
Flanged Connection				
Code	Size	Code	Code	Rating
15	½”	**F**	**150**	150#
20	¾”			
25	1”			
40	1½”			
50	2”		**300**	300#
65	2½”			
80	3”			
100	4”		**600**	600#
150	6”			
200	8”			
250	10”			

Gasket	
C	C.A.F.
P	P.T.F.E.
G	Graphoil

Cushion	
C	C.A.F.
P	P.T.F.E.
G	Graphoil

Fasteners	
C	ASTM A 193 Gr. B7 / ASTM A 194 Gr. 2H
S	SS

Body	
C	CS
S4	SS 304
S4L	SS 304L
S6	SS 316
S6L	SS 316L

Cover Plate	
C	CS
S4	SS 304
S4L	SS 304L
S6	SS 316

Flow Switch

General Instruments Consortium has designed flow switches for the direct control of fluid flow in pipelines and ducts. These switches are magnetically or mechanically actuated. This is simple, reliable and economical solution to control or monitor flow in process lines.

GIC offers two types of Flow Switches:

- **Inline Type**
- **Top Mounted**

This is direct mounted type flow switch in pipe line. This consists of Switch assembly, Body, Bellows and Flapper. This is mounted in horizontal position. Flapper is connected to bellow assembly. When flow reaches beyond set flow the flapper moves in the direction of flow. The displacement of flapper causes actuation of the microswitch through bellow assembly. Inline type flow switch is available upto 50 NB line size and above 50 NB Top mounted is recommended. There are no vertical moving parts and is therefore maintenance free. These flow switches can be mounted in horizontal as well as vertical lines.

Specifications

Type	: Flapper type
Mounting Orientation	: Side Mounted / Top Mounted
Body	: CS, SS 304, SS 304L, SS 316, SS 316L Other on request
Flappers	: SS 304, SS 304L, SS 316, SS 316L Other on request
Bellows	: Phosphorous Bronze
Switch Type	: Snap Acting 1 SPDT / 2 SPDT Microswitch, 5A, 230 VAC
Switch Housing	: • Die Cast Aluminium Weatherproof to IP – 65 • Die Cast Aluminium Explosion proof suitable for Group IIA, IIB • Die Cast Aluminium Explosion proof suitable for Group IIC
Electrical Connection	: ¾"ET(F)
Process Connection	: Inline : Flanged / Screwed – upto 2" Top Mounted : Flanged / Screwed – 1¼" and above
Max Operating Pressure	: 10 Kg/cm^2
Max Operating Temperature	: 80^0C

Line Size	Flow (LPM)	
	Minimum	Maximum
½"	4	20
¾"	8	40
1"	15	190
1½"	30	215
2"	40	360

Flow Switch

FS-I-½SNPTF-S4S4-1S-W5-Z

Ordering Information

FS								Z

Type	
I	Inline Type
T	Top Mounted

Process Connection				
Flanged Connection				
Code	Size	Code	Code	Size
15	½"	F	150	150#RF
20	¾"			
25	1"			
40	1½			
50	2"			
Flanged Connection				
Code	Size	Code	Threading Type	
½	½"	S	NPTM	
¾	¾"			
1	1"		BSPM	
1¼	1¼"		NPTF	
1½	1½"			
2	2"		BSPF	

Enclosure	
W5	Die Cast Aluminium Weatherproof to IP – 65
EA	Die Cast Aluminium Explosion proof suitable for Group IIA, IIB
EC	Die Cast Aluminium Explosion proof suitable for Group IIC

Microswitch	
1S	1 SPDT
2S	2 SPDT

MOC of Flapper	
S4	SS 304
S4L	SS 304L
S6	SS 316
S6L	SS 316L

MOC of Body	
C	CS
S4	SS 304
S4L	SS 304L
S6	SS 316
S6L	SS 316L

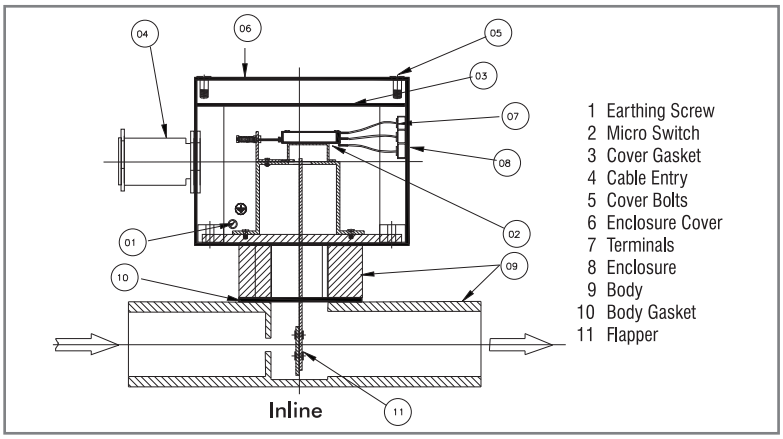

1 Earthing Screw
2 Micro Switch
3 Cover Gasket
4 Cable Entry
5 Cover Bolts
6 Enclosure Cover
7 Terminals
8 Enclosure
9 Body
10 Body Gasket
11 Flapper

Inline

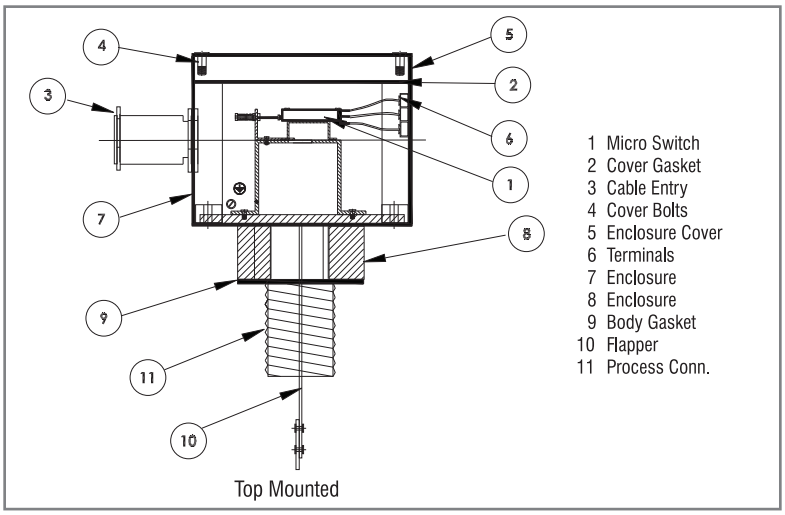

1 Micro Switch
2 Cover Gasket
3 Cable Entry
4 Cover Bolts
5 Enclosure Cover
6 Terminals
7 Enclosure
8 Enclosure
9 Body Gasket
10 Flapper
11 Process Conn.

Top Mounted

Variable Area Flow Meter

General Instruments Consortium offers following variable area flow meters for direct reading of the flow in process lines.

- **Acrylic Body Rotameter**
- **Glass Tube Rotameter**
- **Metal Tube Rotameter**
- **By-Pass Rotameter**
- **Low Flow Rotameter**

Acrylic Body Rotameter

This type of rotameter is recommended for non corrosive fluids. It is machined from solid acrylic bar alongwith the integral metering tube and engraved scale. It is mainly recommended for line sizes from ¼" to 3".

Flow range : From 0.6 – 6 LPH TO 1200 – 12000 LPH of Water.

Glass Tube Rotameter

This type of rotameter is recommended for inline installation. It is available in flanged or screwed connection and various materials i.e. CS, SS304, SS 304L, SS 316, SS 316L, PTFE lined etc. It is mainly recommended for line sizes from ½" to 3"

Flow ranges : From 3 – 30 LPH TO 2500 – 25000 LPH of Water

Metal Tube Rotameter

This type of rotameter is recommended for measurement of translucent fluids with high pressure and temperature. It is available in flanged connection and various materials i.e. CS, SS304, SS 304L, SS 316, SS 316L, etc. It is mainly recommended for line sizes from ½" to 4"

Flow ranges : From 30 – 300 LPH TO 4000 – 40000 LPH of Water

By-Pass Rotameter

This type of rotameter is recommended for flow measurements in more than 50 NB pipe lines. It consists of a complete set of orifice plate, carrier rings, bypass lines and rotameter. It is available in flanged or screwed connection and various materials i.e. CS, SS304, SS 304L, SS 316, SS 316L etc. It is mainly recommended for line sizes from 2" to 12"

Flow range : From 20 – 200 m3/Hr. TO 80 – 800 m3/Hr.

Low Flow Rotameter

This type of rotameter is recommended for low flow measurements and purging applications. It is available in screwed connection particularly ¼" NPT / BSP and various materials i.e. CS, SS304, SS 304L, SS 316, SS 316L etc.

Flow ranges : From 0.6 – 160 LPH of water @ amb. Temperature AND 1.0 – 5000 LPH of Air @ NTP

Flange Dimensions
as per ANSI (ASA) B16.5 150#BLRF

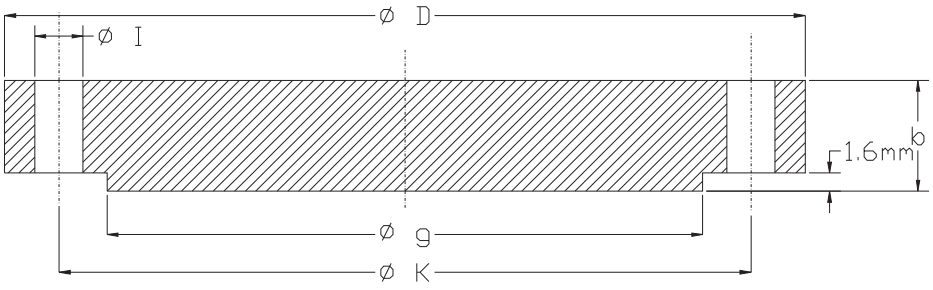

Pipe		Flange		Raised	Drilling Template			Approx. weight in Kgs.
Size	O. D. In mm	D in mm	b in mm	g in mm	No. of holes	l in mm	k in mm	
1/2"	21.34	88.9	11.2	35.1	4	15.7	60.5	0.42
3/4"	26.67	98.6	12.7	42.9	4	15.7	69.9	0.61
1 "	33.40	108.0	14.3	50.8	4	15.7	79.2	0.86
1 1/4"	42.16	117.3	15.7	63.5	4	15.7	88.9	1.17
1 1/2"	48.26	127.0	17.5	73.2	4	15.7	98.6	1.53
2"	60.32	152.4	19.1	91.9	4	19.1	120.7	2.42
2 1/2"	73.02	177.8	22.4	104.6	4	19.1	139.7	3.94
3"	88.90	190.5	23.9	127.0	4	19.1	152.4	4.93
3 1/2"	101.60	215.9	23.9	139.7	8	19.1	177.8	6.17
4"	114.30	228.6	23.9	157.2	8	19.1	190.5	7.0
5"	141.30	254.0	23.9	185.7	8	22.4	215.9	8.63
6"	168.27	279.4	25.4	215.9	8	22.4	241.3	11.3
8"	219.07	342.9	28.4	269.7	8	22.4	298.5	19.6
10"	273.05	406.4	30.2	323.9	12	25.4	362.0	28.8
12"	323.85	482.6	31.8	381.0	12	25.4	431.8	43.2
14"	355.60	533.4	35.1	412.8	12	28.4	476.3	58.1
16"	406.40	596.9	36.6	469.9	16	28.4	539.8	76.0
18"	457.20	635.0	39.6	533.4	16	31.8	577.9	93.7
20"	508.00	698.5	42.9	584.2	20	31.8	635.0	122.0
24"	609.60	812.8	47.8	692.2	20	35.1	749.3	185.0

Approvals

IFFCO
AIR LIQUIDE
ओएनजीसी
ONGC
JAYPEE GROUP
हिन्दुस्तान पेट्रोलियम
HP
सेल SAIL
Reliance
Industries Limited
Sime Darby
DOOSAN
आरसीएफ
NPCIL
شركة تنمية نفط عمان
Petroleum Development Oman
TOYO
ENGINEERING
Bharat
Petroleum
Desin
Instruments
MECON
मेकान
ISO 9001:2000 Company
MAHAGENCO
Maharashtra State Power Generation Co. LTD.
PETRONAS
AVANT-GARDE
ENGINEERS AND CONSULTANTS (P) LTD.
TATA
TATA PROJECTS LIMITED
APGENCO
बीएचईएल
BHEL
EWA
هيئة الكهرباء والماء
Electricity & Water Authority
Kingdom of Bahrain
गेल
GAIL
GAIL (I) LIMITED
JSW
इंडियनऑयल
IndianOil
Uhde
ThyssenKrupp
EIL
एनटीपीसी
NTPC
Punj Lloyd
GROUP
SIEMENS
KNPC
تكرير
TAKREER
شركة أبوظبي لتكرير النفط
BGR
ENERGY
GACL
Promoting Green Technology
شركة نفط الكويت
Kuwait Oil Company
LANCO
Always Inspiring
ESSAR
FLUOR
CPCL
قطر للبترول
Qatar Petroleum
THE LINDE GROUP
Technip
Maire
Tecnimont

RMK GROUP OF COMPANIES

General® INSTRUMENTS CONSORTIUM

(An ISO 9001 : 2008 / ISO 14001:2004 & OHSAS 18001:2007 Certified Company)

Head Office: 194/195, Gopi Tank Road, Mahim, Mumbai - 400016, INDIA
Tel.: +91 22 2445 4387(5 Lines), +91 2445 7582 Fax: +91 22 2444 9123, +91 22 2445 5026
E-mail: ramk@giconindia.com, mifepl@giconindia.com
Website: www.generalinstruments.net, www.general-flowproducts.com

Manufacturing Plants:

Plant I
THERMAL INSTRUMENT INDIA PRIVATE LIMITED
Survey No. 250 A/B - At & Post Mangaon, Taluka - Kudal, Dist. Sindhudurg - 416 519, Maharashtra, INDIA
Tel.: +91 2362 236 243, +91 2362 236 026
Fax: +91 2362 236018 E-mail: elements@giconindia.com

Plant II
F.A.T.I. GENERAL EQUIPMENTS PVT. LTD.
2, 3 Jawahar Co-op. Industrial Estate, Kamothe, Panvel - 410 209 INDIA
Tel.: +91 22-2743 1357 / 58 E-mail: sales@fati-india.com

Plant III
MINCO (INDIA) FLOW ELEMENTS PRIVATE LIMITED
D2-49-50 Tivim Industrial Estate, Karaswada, Mapusa, Goa - 403 526, INDIA
Tel.: +91 832 2257059 E-mail: mifepl@giconindia.com

BRANCHES:

MUMBAI
194/195, Gopi Tank Road, Behind Citylight Cinema,
Mahim, Mumbai - 400 016, INDIA
Phone: +91-22-24454387 / 24449177
Email-Id: elements@giconindia.com

DELHI
511, Eros Apartments,
56, Nehru Place, New Delhi-110019
Phone: 011-41607476
Email-Id: element_delhi@giconindia.com

CHENNAI
20,1st Floor, Bora Complex,
25, Flower Street, Saidapet, Chennai - 600 015
Phone : 044 24361550
Email-Id: elementschennai@giconindia.com

KOLKATA
Moonsun Apartment, 5th Floor, Kaikhali,
V.I.P. Road, Kolkata-700052
Mobile: 09883309515/07488299449
Email-Id: element.kolkata@giconindia.com

BANGALORE
1005, B-Wing, Mittal towers,
M G Road, Bangalore - 560001
Phone: 080-30500041
Email-Id: gicbangalore@giconindia.com

HYDERABAD
411, 3rd Floor, Bhavya's Padmavati Plaza
Commercial Complex, K. P. H. B., Kukatpally,
Hyderabad – 500 072 (Andhra Pradesh)
Mobile: 0-86884-74949
Email-Id: elements_hyd@giconindia.com

PUNE
BR1-407, Jai Ganesh Vision, Akurdi Chowk,
Akurdi, Pune- 411035, INDIA
Mobile: 7303 065 735
Email-Id: elementspune@giconindia.com

VADODARA
801/B, Yash Kamal Building,
Sayajigunj, Vadodara - 390 005
Phone: 0265-2225192
Email-Id: gicelements@giconindia.com

GOA
D2/49-50,Tivim Industrial Estate, Karaswada,
Mapusa, Goa-403 526
Phone: 0832-2257059
Email-Id: mifepl@giconindia.com

OVERSEAS NETWORK:

GENERAL INSTRUMENTS MIDDLE EAST (FZC)
Sharjah Airport Free Zone, Warehouse No. Q3-121,
PO Box : 123035, Sharjah – UAE
Tel : +971-50 6284329 / +971 65 526054
Email-Id: enquiry@generalinstrumentsme.com

GENERAL INSTRUMENTS EUROPE - UK
2nd Floor, Building 3, Chiswick Park,
566 Chiswick High Road, Chiswick
London W4 5YA

GENERAL INSTRUMENTS EUROPE - GERMANY
Graf-adolf-platz 12,
D-40213 Duesseldorf, Germany
Tel.: +49 (0)211/30234815
Email-Id: sales@generalinstruments.eu

F.A.T.I. Srl - ITALY
Via Volta, 52 - 20090 Cusago (Milano - Italy)
Tel.: +39 0290119641
Email-Id: sergio.novelli@fati.com

- AUSTRALIA
- BAHRAIN
- CANADA
- DUBAI
- FRANCE
- GERMANY
- INDONESIA
- IRAN
- ITALY
- JAPAN
- KUWAIT
- KOREA
- MALAYSIA
- NETHER LAND
- OMAN
- PHILIPPINES
- QATAR
- SINGAPORE
- SRI LANKA
- THAILAND
- U K
- USA
- VIETANAM

www.designshop4u.com